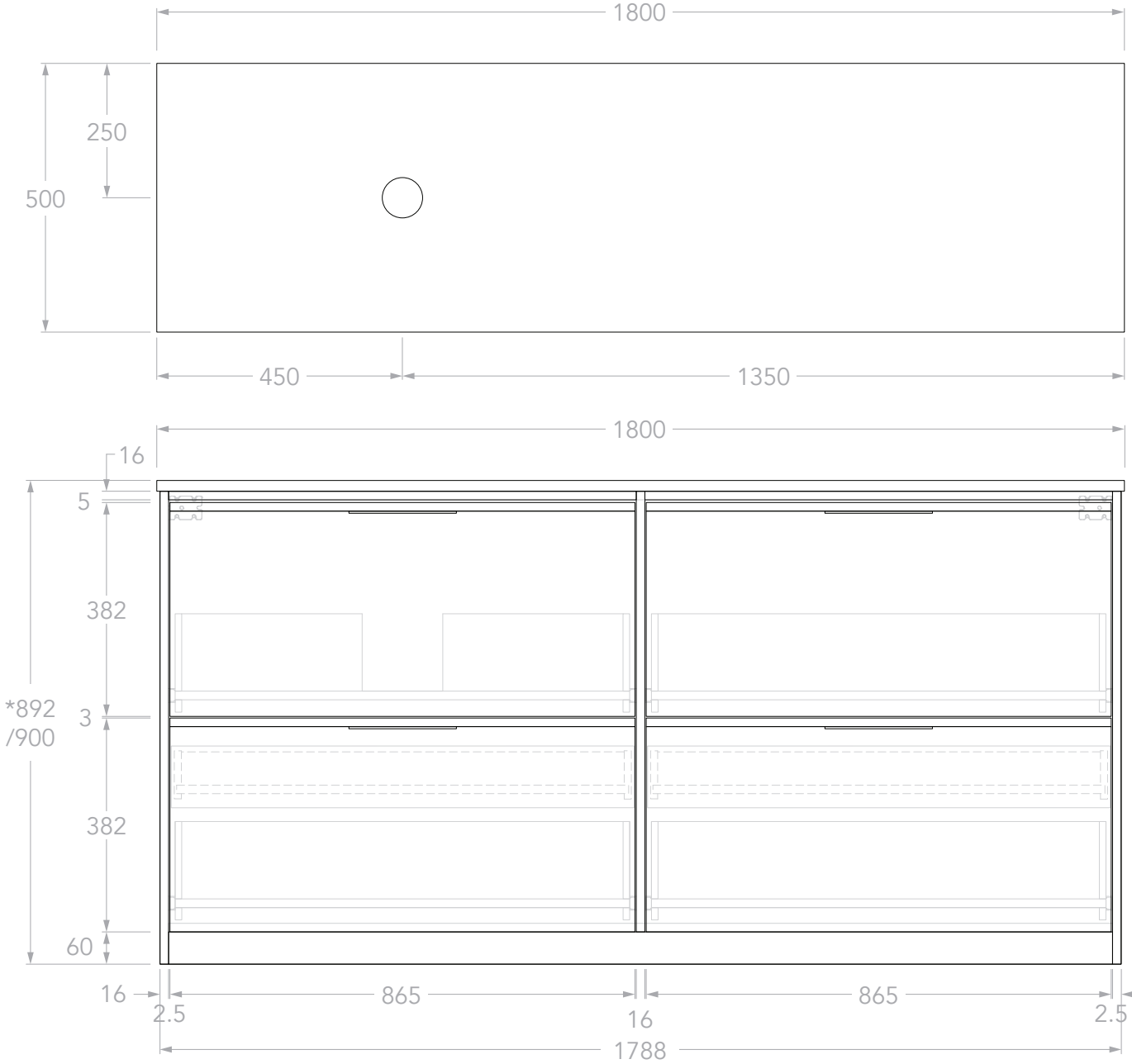

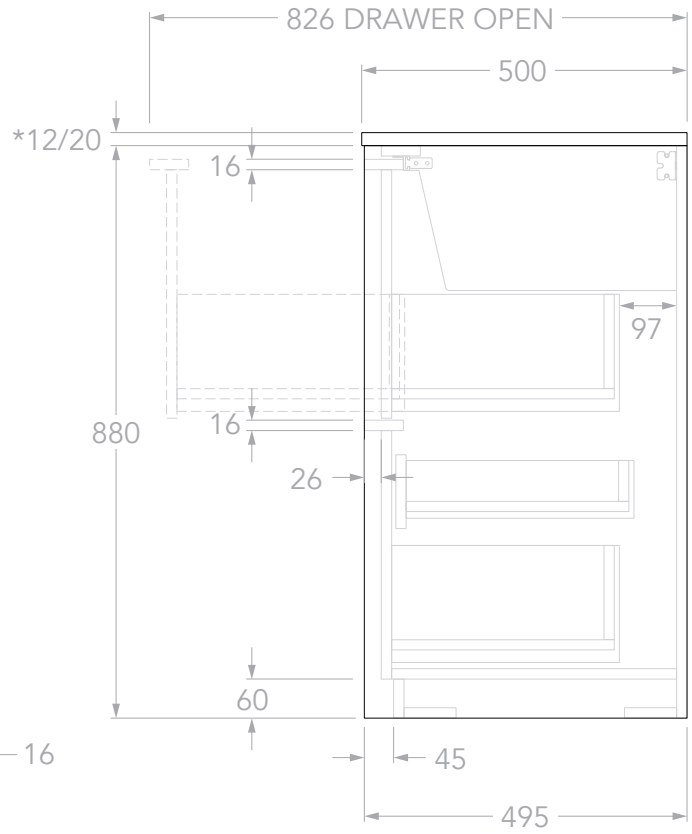

Adp

PRODUCT:	ELI 1800 LEFT	TOP:	BENCHTOP ONLY (REFER TO CODE)
SIZE:	1800W x 500D x *892/900H	BASIN POSITION:	LEFT
CONFIGURATION:	ALL-DRAWER, FLOOR MOUNT	CODE:	ELIFAW1800WKL**
VERSION: 01	DATE: 23/09/2024		CODE SUFFIX DEPENDENT ON BENCHTOP MATERIAL SEE BROCHURE OR ADPAUSTRALIA.COM.AU FOR DETAILS

NOTES:

DIMENSIONS ARE NOMINAL. DO NOT DRILL OR ROUGH IN UNTIL YOU HAVE RECIEVED AND MEASURED YOUR VANITY.

ALL DIMENSIONS ARE IN MILLIMETRES. DO NOT MEASURE FROM DRAWING.

*FOR DURASEIN FINISHES 12MM MATERIAL THICKNESS. 20MM THICKNESS FOR ALL OTHER BENCHTOP FINISHES.