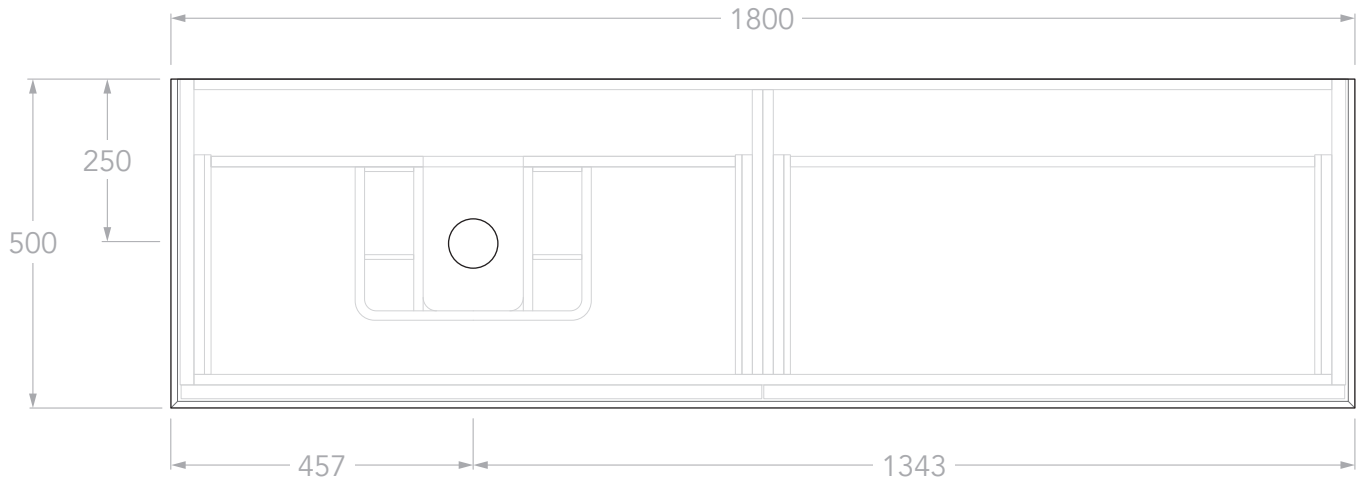

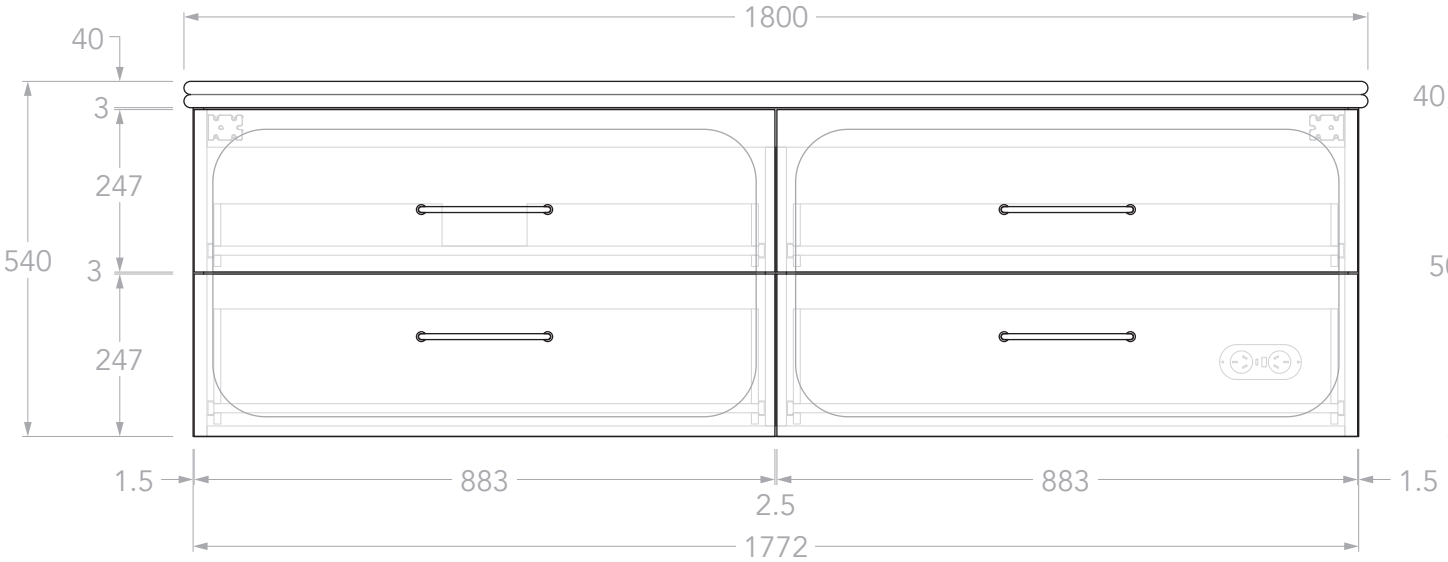

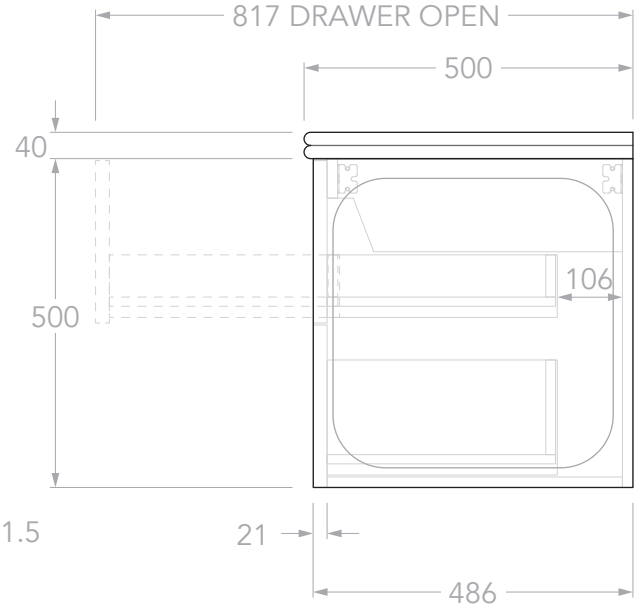

Adp

PRODUCT:	MADDEN 1800 LEFT	TOP:	BENCHTOP ONLY (REFER TO CODE)
SIZE:	1800W x 500D x 540H	BASIN POSITION:	LEFT OFFSET
CONFIGURATION:	ALL-DRAWER, WALL HUNG	CODE:	MADFAW1800WHL** CODE SUFFIX DEPENDENT ON BENCHTOP MATERIAL SEE BROCHURE OR ADPAUSTRALIA.COM.AU FOR DETAILS
VERSION: 01	DATE: 05/06/2025		

NOTES:

DIMENSIONS ARE NOMINAL.

DO NOT DRILL OR ROUGH IN UNTIL YOU HAVE RECIEVED AND MEASURED YOUR VANITY.

ALL DIMENSIONS ARE IN MILLIMETRES. DO NOT MEASURE FROM DRAWING.