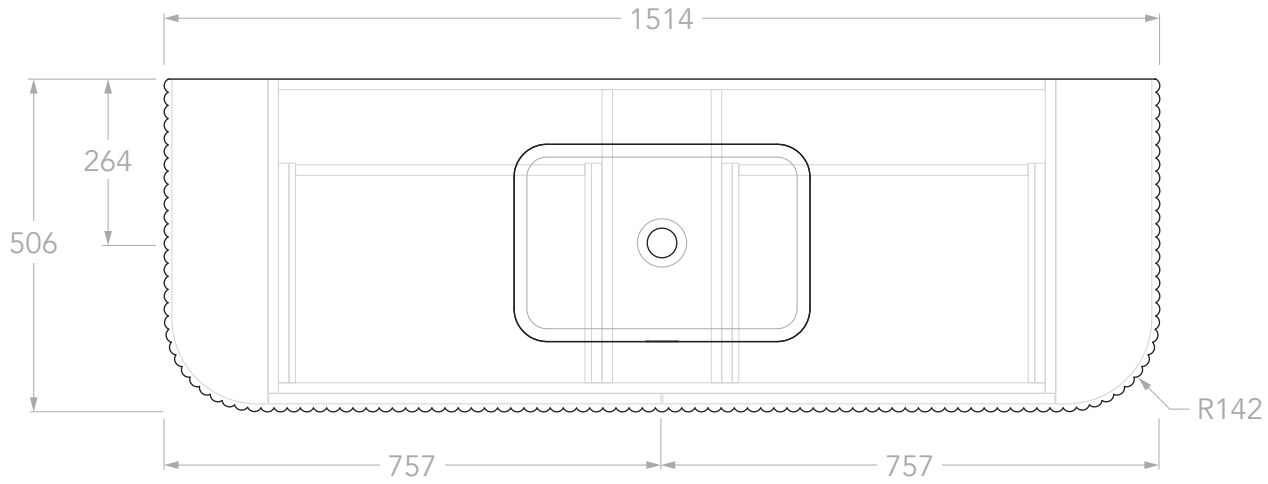

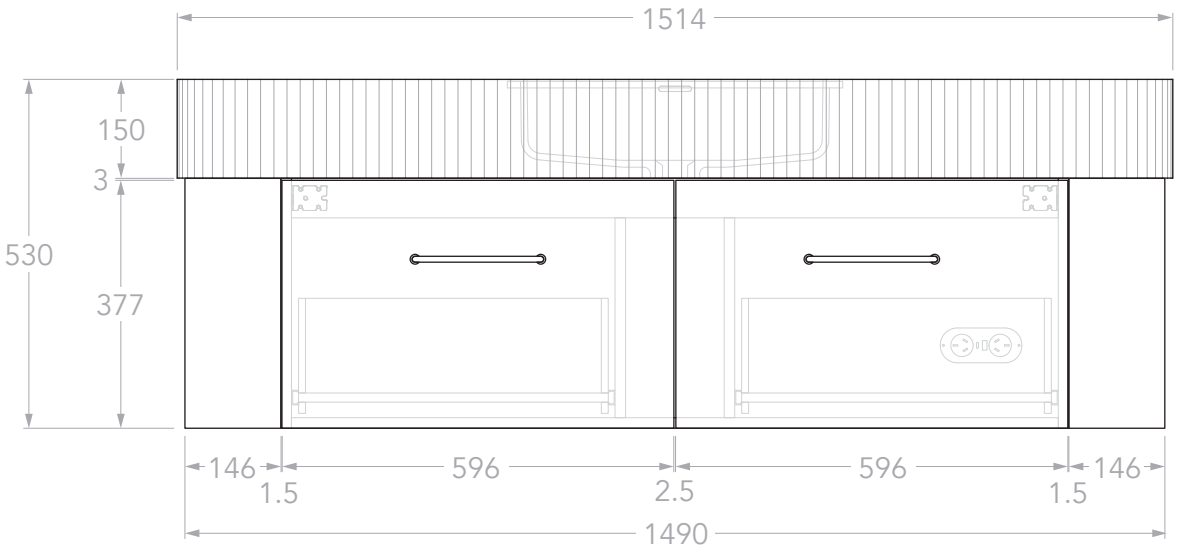

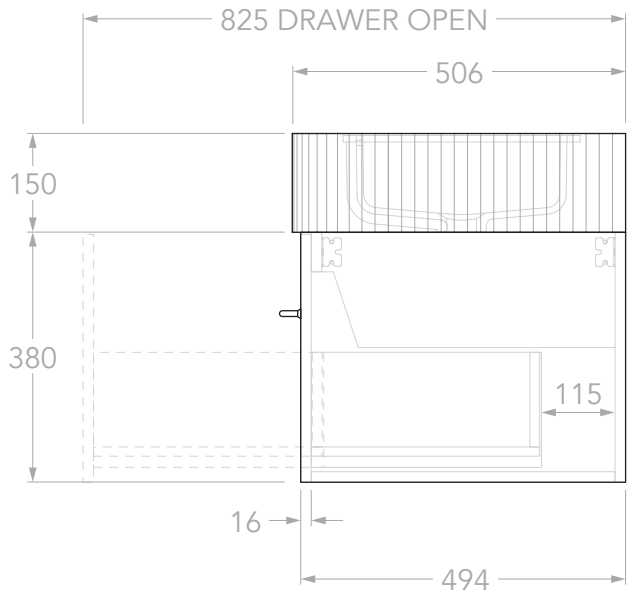

Adp

PRODUCT:	SURRY 1500 CENTRE - IMPERIAL	TOP:	IMPERIAL SOLID SURFACE TOP
SIZE:	1514W x 506D x 530H	BASIN POSITION:	CENTRE
CONFIGURATION:	ALL-DRAWER, WALL HUNG	CODE:	SURFAS1500WHCSS
VERSION: 02	DATE: 23/02/2026		

NOTES:

DIMENSIONS ARE NOMINAL.

DO NOT DRILL OR ROUGH IN UNTIL YOU HAVE RECIEVED AND MEASURED YOUR VANITY.

ALL DIMENSIONS ARE IN MILLIMETRES. DO NOT MEASURE FROM DRAWING.