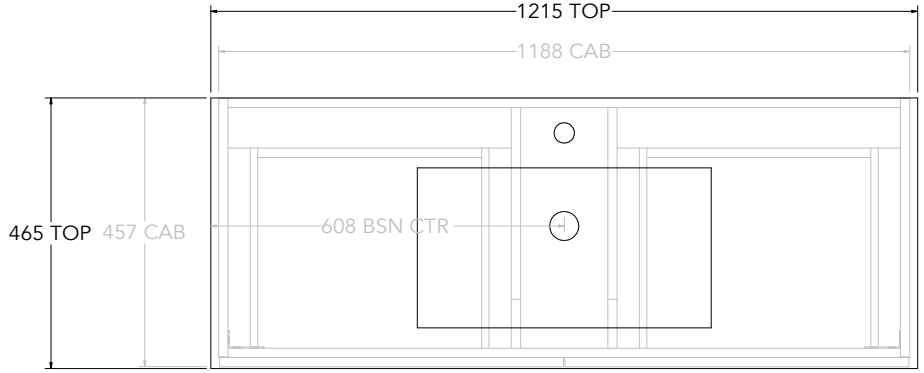

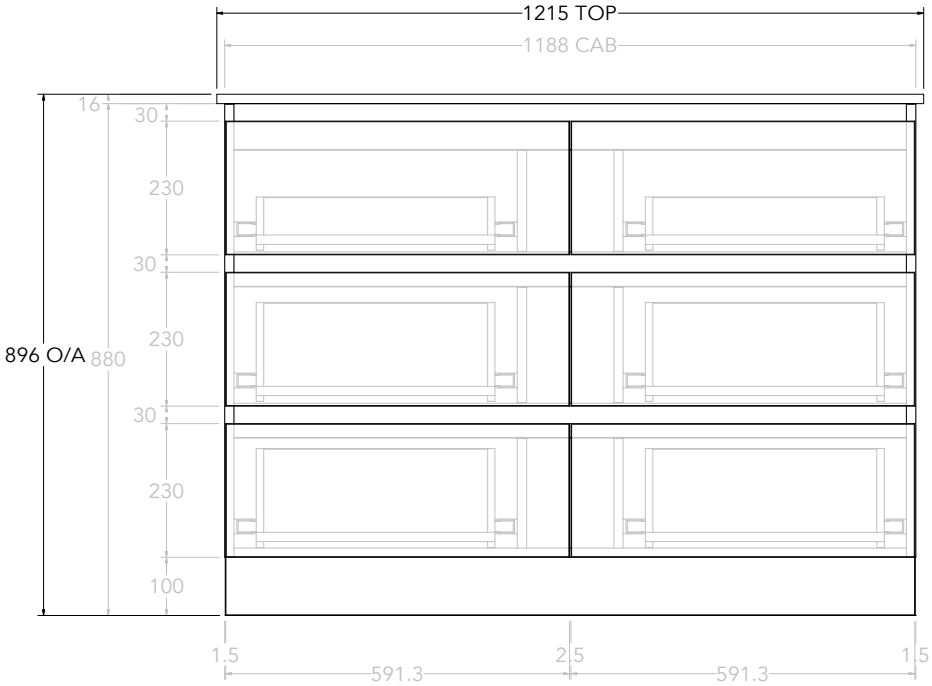

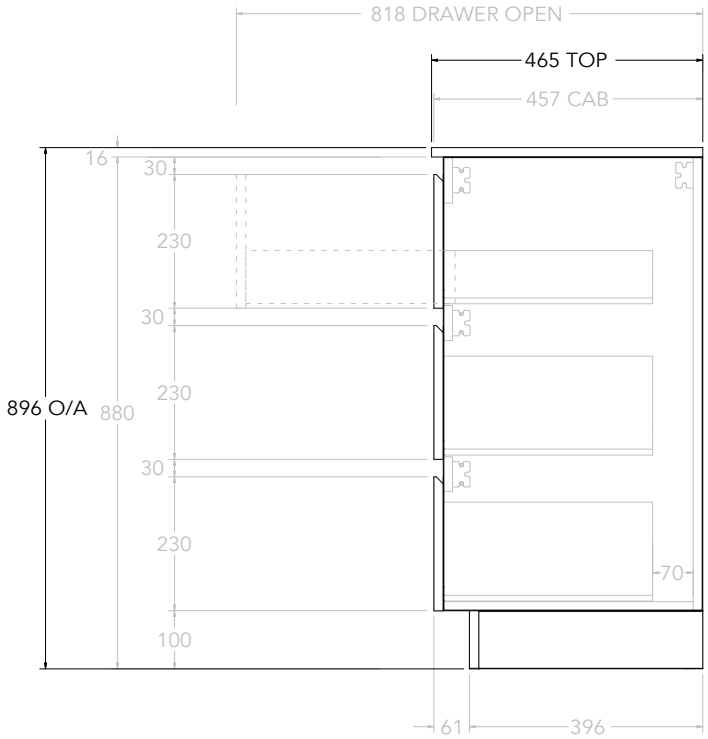

Adp

PRODUCT:	GLACIER ALL DRAWER TRIO 1200 FLOOR MOUNT CENTRE BASIN		
CODE:	LITE: GLLFAT1200WKCCE	PRO: GLPFAT1200WKCCE	
MOUNTING:	FLOOR MOUNT		
SIZE:	1215W X 465D X 896H		
CONFIGURATION:	ALL DRAWER		
VERSION: 02	DATE: 15/03/2023		

TOP:	CERAMIC GLACIER 1200
BASIN POSITION:	CENTRE BASIN

NOTES:

ALL DIMENSIONS ARE NOMINAL AND SUBJECT TO CHANGE.
DO NOT DRILL OR ROUGH IN UNTIL YOU HAVE RECEIVED AND MEASURED YOUR PRODUCT.
ALL DIMENSIONS ARE IN MILLIMETRES.
DO NOT MEASURE FROM DRAWING.