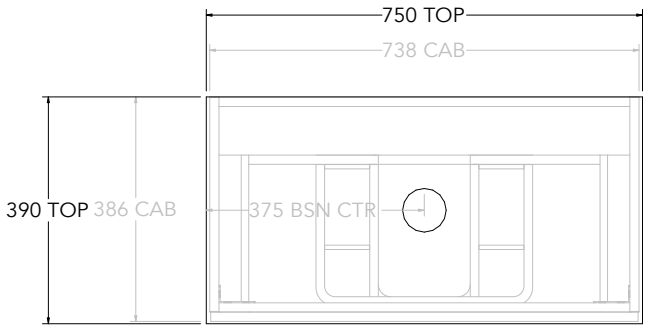

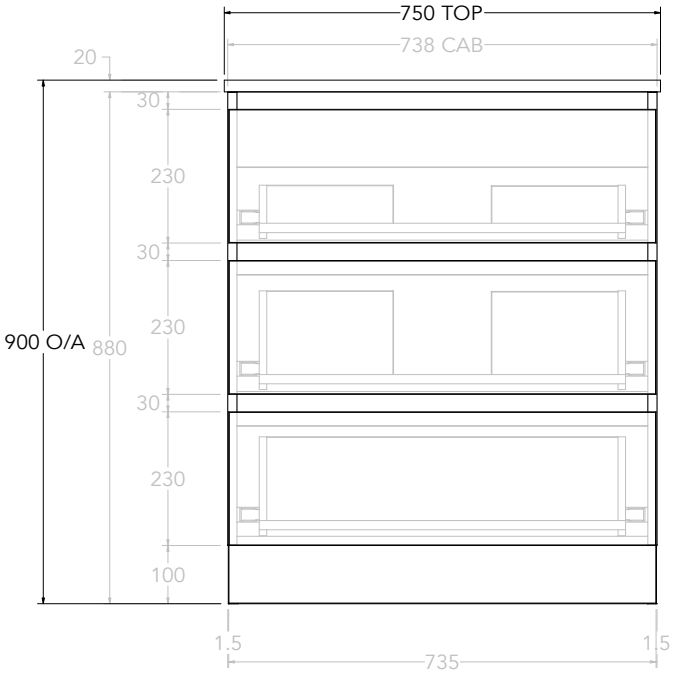

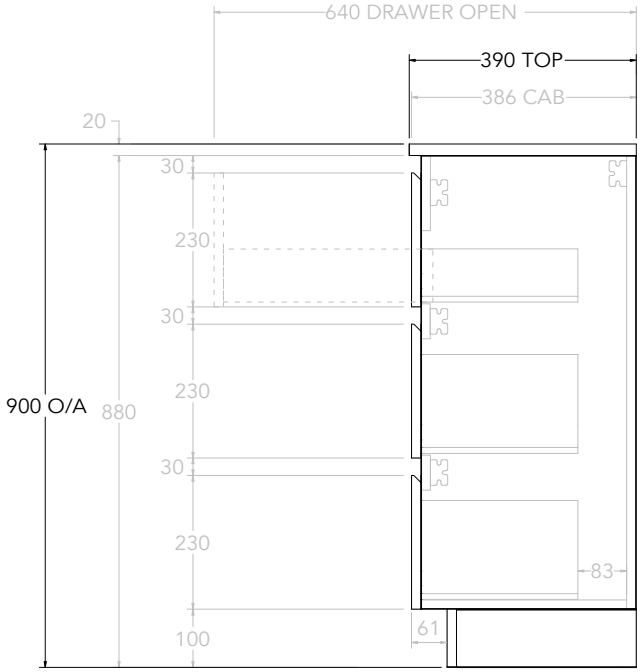

Adp

PRODUCT:	GLACIER ENSUITE ALL-DRAWER TRIO 750 FLOOR MOUNT CENTRE BASIN		
CODE:	LITE: GLLEAT0750WKC	PRO: GLPEAT0750WKC	
MOUNTING:	FLOOR MOUNT		
SIZE:	750W X 390D X 900H		
CONFIGURATION:	ALL-DRAWER		
VERSION: 02	DATE: 11/02/2026		

TOP:	BENCHTOP
BASIN POSITION:	CENTRE BASIN

REFER TO WEBSITE FOR BENCHTOP OPTIONS AND RELATED CODES.
20MM TOP THICKNESS PICTURED, FOR DURASEIN FINISHES TOP THICKNESS IS 12MM.
MORE INFORMATION AVAILABLE AT WWW.ADPAUSTRALIA.COM.AU

NOTES:

ALL DIMENSIONS ARE NOMINAL AND SUBJECT TO CHANGE.
DO NOT DRILL OR ROUGH IN UNTIL YOU HAVE RECEIVED AND MEASURED YOUR PRODUCT.
ALL DIMENSIONS ARE IN MILLIMETRES.
DO NOT MEASURE FROM DRAWING.