PRODUCT:	SOUL CLASSIC GOOSENECK SHOWER
SIZE:	1034H x 515D x 220W
TYPE:	SHOWER
VERSION: 01	DATE: 22/04/2024

CHROME	JTAPCSRTSETSOUCP
MATTE WHITE	JTAPCSRTSETSOUWH
MATTE BLACK	JTAPCSRTSETSOUBK
BRUSHED NICKEL	JTAPCSRTSETSOUNK
BRUSHED BRASS	JTAPCSRTSETSOUBB
BRUSHED COPPER	JTAPCSRTSETSOUBCO

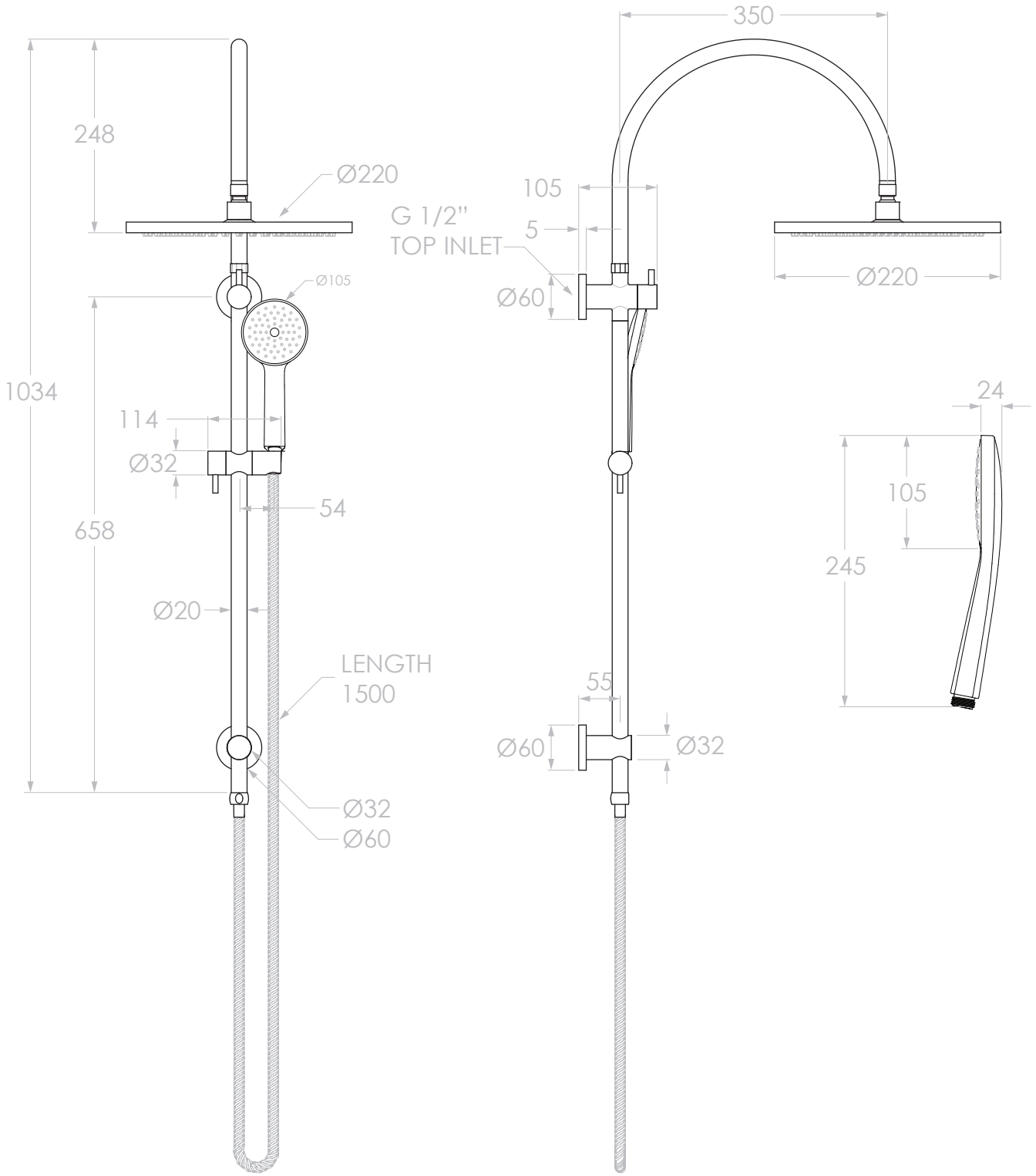

NOTES:

ALL DIMENSIONS ARE NOMINAL AND SUBJECT TO CHANGE.
DO NOT DRILL OR ROUGH IN UNTIL YOU HAVE RECEIVED AND MEASURED YOUR PRODUCT.
ALL DIMENSIONS ARE IN MILLIMETRES.
DO NOT MEASURE FROM DRAWING.

WATER SUPPLY REQUIREMENTS:

NOT RECOMMENDED FOR GRAVITY FED WATER SYSTEMS OR WATER TANKS.

WORKING PRESSURE:	350 – 500KPA	(INCLUDING COLD AND HOT WATER PRESSURE)
MAXIMUM PRESSURE:	73PSI / 500KPA	
TEMPERATURE RATING:	5°C - 65°C	(MUST NOT EXCEED 70°C)

INSTALLATION SHOULD COMPLY WITH AUSTRALIAN STANDARD AS/NZS 3500 OR RELEVANT LOCAL AUTHORITY REQUIREMENTS.