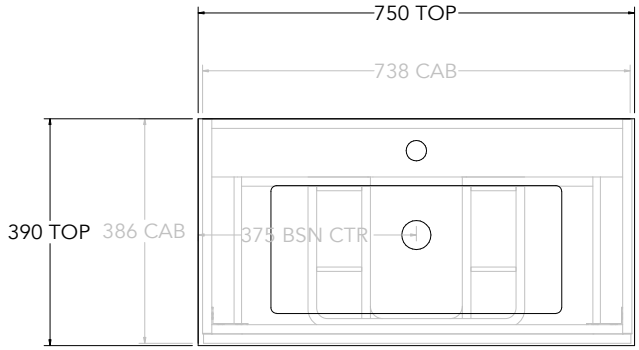

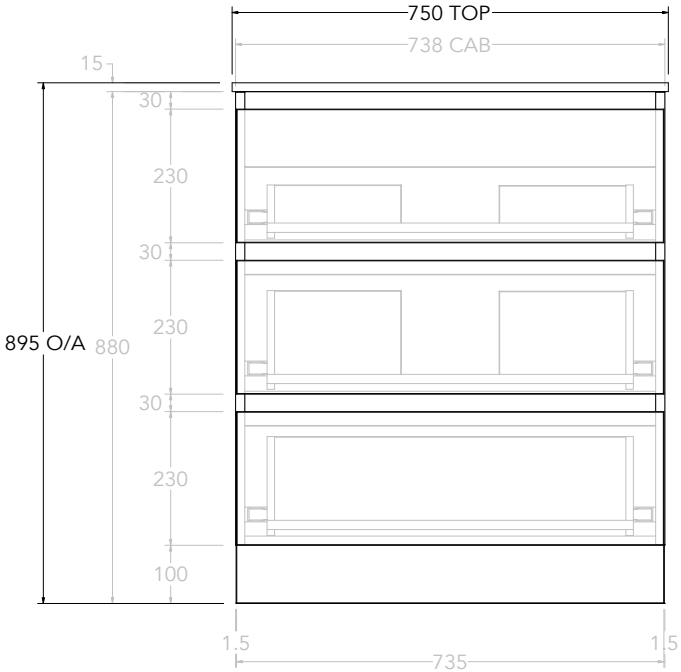

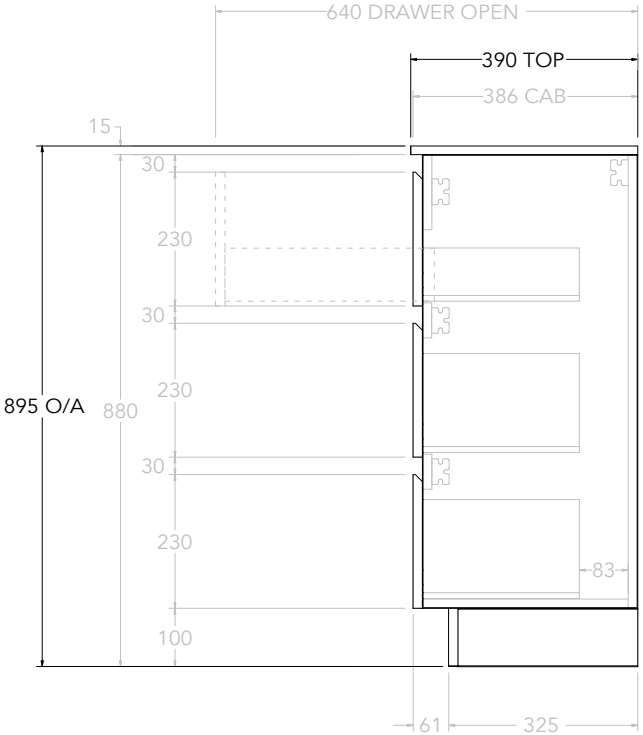

PRODUCT:	GLACIER ENSUITE ALL-DRAWER TRIO 750 FLOOR MOUNT CENTRE BASIN		
CODE:	LITE: GLLEAT0750WKCCM	PRO: GLPEAT0750WKCCM	
MOUNTING:	FLOOR MOUNT		
SIZE:	750W X 390D X 895H		
CONFIGURATION:	ALL-DRAWER		
VERSION: 02	DATE: 10/02/2026		

TOP:	CAST MARBLE LOLA 750
BASIN POSITION:	CENTRE BASIN

NOTES:

ALL DIMENSIONS ARE NOMINAL AND SUBJECT TO CHANGE.
DO NOT DRILL OR ROUGH IN UNTIL YOU HAVE RECEIVED AND MEASURED YOUR PRODUCT.
ALL DIMENSIONS ARE IN MILLIMETRES.
DO NOT MEASURE FROM DRAWING.