PRODUCT:	BLOOM SHOWER SET	
SIZE:	1080H x 550D x 200W	
TYPE:	SHOWER	
VERSION: 02	DATE: 03/04/2023	

CHROME	JTAPSRSETBLMCP
MATTE BLACK *(ELECTROPLATED)*	JTAPSRSETBLMBK
BRUSHED NICKEL *(PVD)*	JTAPSRSETBLMNK
BRUSHED BRASS *(PVD)*	JTAPSRSETBLMBB
BRUSHED GUNMETAL *(PVD)*	JTAPSRSETBLMBGM

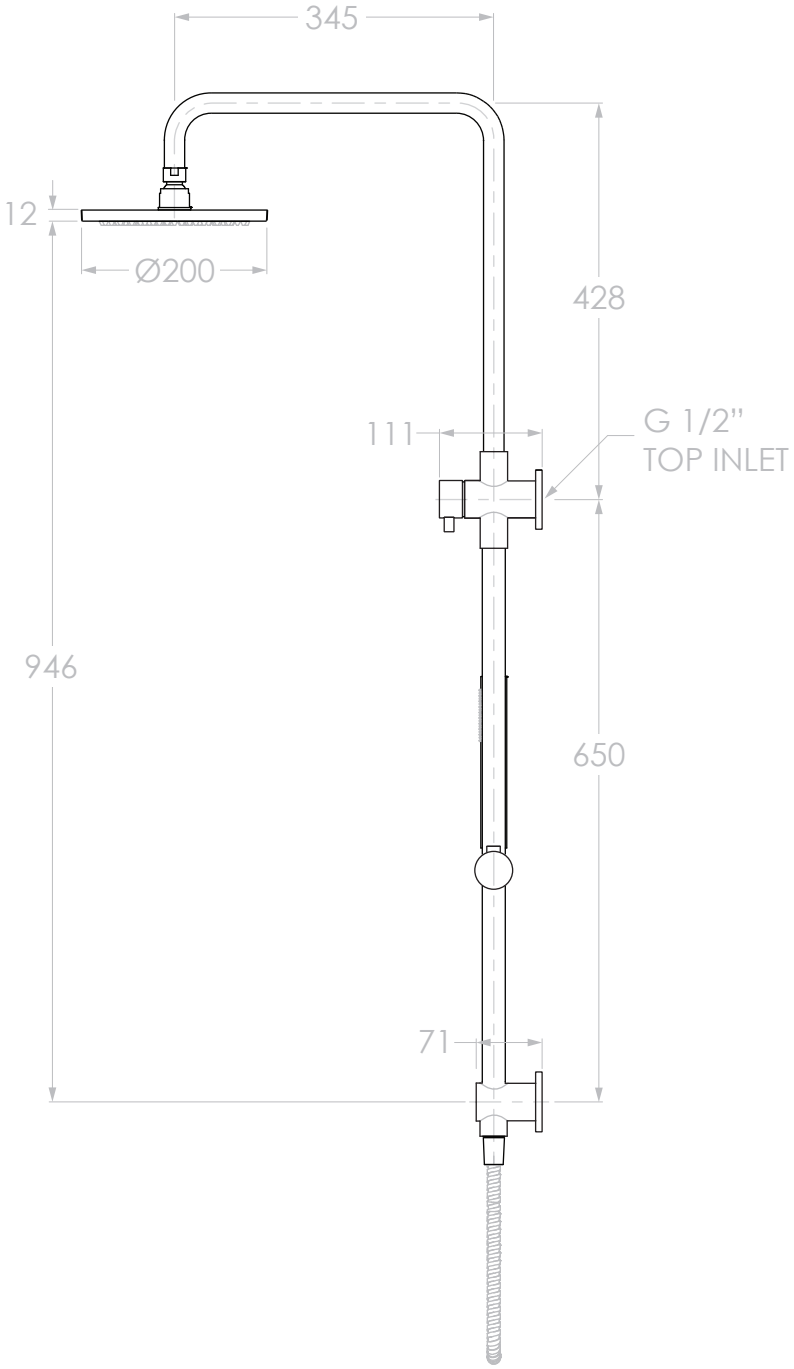

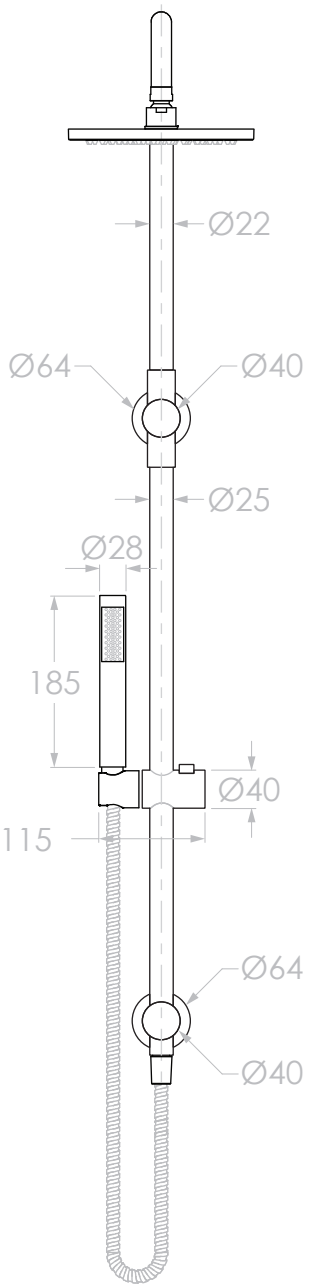

NOTES:

ALL DIMENSIONS ARE NOMINAL AND SUBJECT TO CHANGE.
DO NOT DRILL OR ROUGH IN UNTIL YOU HAVE RECEIVED AND MEASURED YOUR PRODUCT.
ALL DIMENSIONS ARE IN MILLIMETRES.
DO NOT MEASURE FROM DRAWING.

WATER SUPPLY REQUIREMENTS:

NOT RECOMMENDED FOR GRAVITY FED WATER SYSTEMS OR WATER TANKS.

WORKING PRESSURE:	350 – 500KPA	(INCLUDING COLD AND HOT WATER PRESSURE)
MAXIMUM PRESSURE:	73PSI / 500KPA	
TEMPERATURE RATING:	5°C - 65°C	(MUST NOT EXCEED 70°C)

INSTALLATION SHOULD COMPLY WITH AUSTRALIAN STANDARD AS/NZS 3500 OR RELEVANT LOCAL AUTHORITY REQUIREMENTS.